PVT Analysis of a 2.4 GHz 19.9 dBm Fully Integrated CMOS Power Amplifier with 23.5 dB Gain

F. Santos, A. Mariano, B. Leite
Group of Integrated Circuits and Systems, GICS
Federal University of Paraná, UFPR
Curitiba, Brazil

***Abstract*—This paper presents the simulated results of a fully integrated, two-stage, 2.4 GHz 130 nm CMOS cascode PA evaluated across different scenarios. Those scenarios account supply voltage and temperature variation in seven different corners. Based on highest 1 dB output compression point (OCP_{1dB}), extreme cases in terms of process corners, temperature and supply voltage are compared to a typical operation scenario. In the best scenario, the PA achieves an OCP_{1dB} of 19.4 dBm, a P_{SAT} of 19.9 dBm and a 23.5 dB gain, whereas in the least favorable condition, these values are respectively reduced to 14 dBm, 16.2 dBm and 16.9 dB.**

Keywords—130 nm CMOS PA; PVT PA analysis; 2.4 GHz CMOS PA;

I. INTRODUCTION

A power amplifier (PA) is the last active component of a wireless transmission system (Fig. 1) responsible for strengthening low power radio frequency (RF) signals into high power RF levels. Thus, the PA handles high current levels and, consequently, has the highest power consumption of the RF transmitter [1].

Being the baseband processor the most complex digital block of a transceiver, CMOS technology is preferred in its design. The integrated circuit benefits from CMOS low fabrication cost and high scalability [2]. In terms of cost, it is reasonable, therefore, to expect other building blocks of RF systems being implemented in the same process. However, RF design in CMOS has several drawbacks that are critical in a PA implementation as the technology scales down. These include high knee voltage and low transistor breakdown voltage, which lead to poorer linearity and efficiency [1].

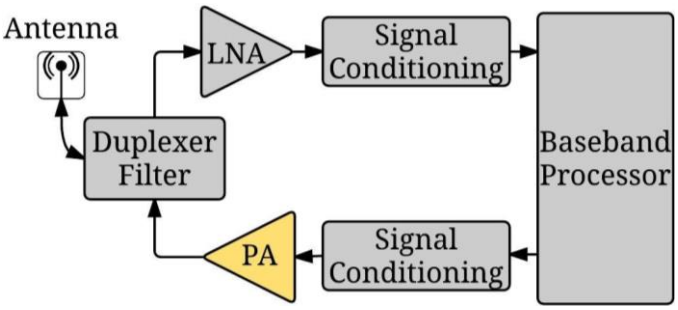

Fig. 1. A simplified transceiver architecture. The PA is the last active building block in the transmission path.

In order to characterize the PA operation limits, a Process-Voltage-Temperature (PVT) analysis may be employed. This analysis accounts variations on the CMOS fabrication process and circuits' operating temperature and supply voltage. Due to doping variations during fabrication process, MOSFETs may operate faster (lower parasitic capacitances) or slower, impacting directly on the gain, load impedance and bandwidth of PA. Temperature and supply voltage directly affect the output power capability of the PA [1].

Even though those disadvantages may seem discouraging, CMOS cost advantage and challenges lure interest. Efforts on developing CMOS PAs, especially at 2.4 GHz, are found in recent literature, such as Knopik *et al.* who propose a conventional two stage 130 nm cascode PA that operates with two different supply voltages [3], Kang *et al.*, presenting a fully integrated, differential Doherty based, ultra-high power added efficiency (PAE) PA using 130 nm process [4], and Lin *et al.*, who introduce the use of a high quality non-standard bondwire inductor to boost output power and efficiency of a 180 nm PA [5]. Other relevant works include Hong *et al.* who employ a cross capacitor technique to reduce voltage-stress issues and to improve isolation in a 180 nm transformer coupled PA [6], Ryu *et al.* who propose a fully integrated variable gain power amplifier using 40 nm process [7], and Santos *et al* present a multimode 17 dBm fixed output power PA with gain control in 130 nm technology [8].

This paper aims to present the simulated results of a 2.4 GHz 130 nm CMOS PA evaluated across different scenarios that account variations in supply voltage and temperature in seven different statistical fabrication corners. Based on the highest 1 dB output compression point (OCP_{1dB}), worst and best cases are elected and compared to typical scenario. Lastly, the best scenario is confronted to the literature.

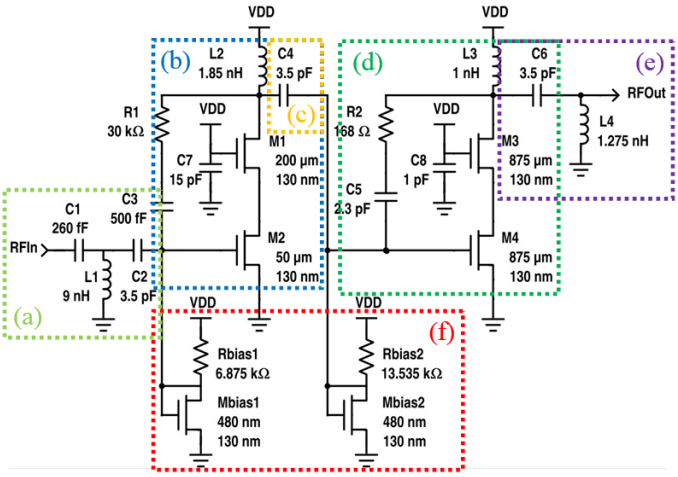

Fig. 2. Proposed two-stage fully integrated CMOS PA architecture. It is composed of six blocks: input, inter-stage and output impedance matching networks (a, c and e), a gain and power stages (b and d) and voltage reference circuits for biasing (f).

II. Circuit Design

A. Proposed topology

Fig. 2 depicts the proposed topology. The PA is composed by an input impedance matching network (a), a gain stage (b), an interstage impedance matching element (c), a power stage (d), an output impedance matching network (e) and voltage reference circuits for biasing (f).

The input matching network is implemented using two capacitors and one inductor. Those components are used to block DC current from input and to maintain the input impedance close to 50 Ω. The interstage matching element is composed by a series capacitor, which blocks DC and, alongside inductor L_2, matches the output impedance of the gain stage to the input impedance of the power stage impedance. The output matching network is designed to to provide to the power stage the best load-pull impedance considering a 50 Ω antenna.

The gain stage and power stage are both composed by a cascode amplifier and a feedback network to improve stability. The voltage reference circuit provides adequate biasing to both cascode structures. The supply and biasing voltages are set to 1.8 V.

The used fabrication process was GLOBALFOUNDRIES' 130 nm RF CMOS. It includes eight metallization levels and MiM capacitors. Fig. 3 presents the proposed layout, from which parasitic resistance and capacitance where extracted to run post-layout simulations using Cadence Spectre RF.

III. Results and Discussion

A. Evaluation method

Small and large signal metrics of the PA were evaluated across different scenarios that accounted for different process corners, variation on supply voltage and different temperature extremes. The considered corners were *Typical* (*TT*), *Fast-Slow* (*FS*), *Slow-Fast* (*SF*), *Fast-Fast* (*FF*), *Slow-Slow* (*SS*), *Fast-Fast Functional* (*FFF*) and *Slow-Slow Functional* (*SSF*). *TT* corresponds to the simulation where corners parameters represent the nominal process fabrication. Due to channel length and dopant variations, it is possible for NFETs to run faster and PFETs slower (*FS*) and vice versa (*SF*). In their turn, *FF* and *SS* corners represent fast and slow timing for both CMOS devices. These four corners are known as performance corners and their corner parameters are varied for less than ± 3σ deviations. Functional corners *FFF* and *SSF*, in their turn, account critical parameters at ± 3σ deviations. While testing the processes, V_{DD} was varied ±10% at two temperature extremes of 40 ºC and 125 ºC. Both V_{DD} tolerance and temperature range consider consumer electronics operating variations. The 20 percentage points are intended to accommodate conventional consumer electronics supply voltage variations and the temperature interval to contain the range of 0 ºC to 85 ºC with a 40 ºC offset. This offset was chosen due to the temperature elevation caused by the power handled by the PA.

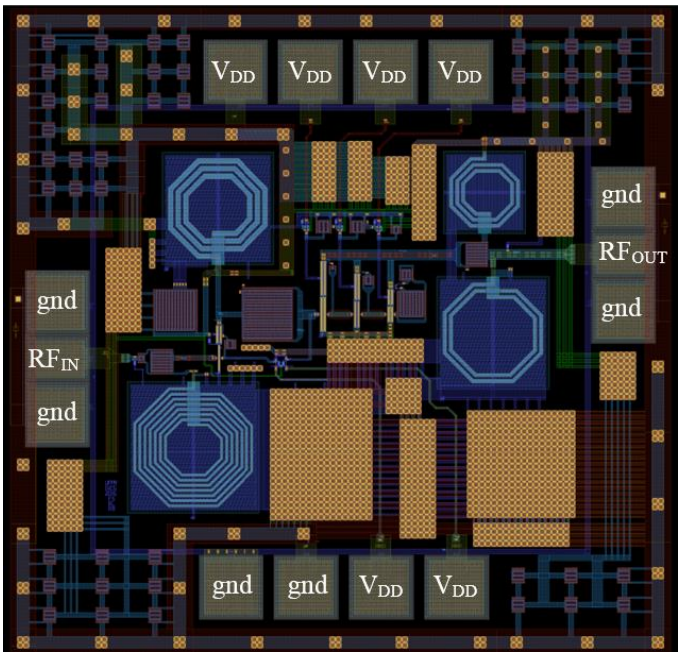

Fig. 3. The proposed PA layout, presenting metallization levels, passives, transistors and pads. The circuit measures 1320 µm by 1285 µm including pads and decoupling capacitors

In order to determine extreme operation scenarios, the PA's OCP_{1dB} was evaluated. Fig. 4. presents the obtained results. The best scenario obtained was a combination of *FF* corner and V_{DD} of 1.98 V at 40 ºC while the worst was a combination of *SSF* corner and V_{DD} of 1.62 V at 125 ºC. The typical case considers a V_{DD} of 1.8 V at 70 ºC.

B. Power amplifier performance results

Fig. 5 details the simulated µ stability factor as a function of frequency for typical and extremes scenarios. All scenarios are unconditionally stable and the global minimum µ is 1.05 at 100 Hz. Considering the average value of µ at a 5 GHz bandwidth, the least stable combination is *FF* corner, V_{DD} of

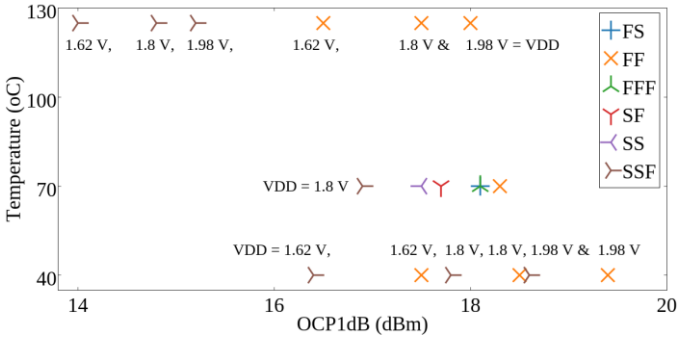

Fig. 4. PVT analysis in terms of OCP_{1dB} of the proposed PA. Each set of symbols represents a different corner. The rightmost symbol represents the highest OCP_{1dB} while the leftmost the lowest. Extreme cases obtained at V_{DD} = 1.8 V (*SSF* and *FF*) were evaluated at 40 ºC and 125 ºC varying V_{DD} ± 10 %.

1.98 V and 40 ºC while the most stable is composed by *SSF* corner, V_{DD} of 1.62 V and 125 ºC. At 2.4 GHz, *TT* performs a power gain (S_{21}) of 21.1 dB while *FF* achieves 23.5 dB and *SSF* 16.9 dB. (Fig. 6). *TT* performs an input port voltage reflection coefficient (S_{11}) of -8.2 dB and reverse gain (S_{12}) of -72.8 dB. *FF*, in its turn, achieves S_{11} of -9.2 dB and an S_{12} of -75.2 dB, respectively. Lastly, *SSF* reaches -7 dB and -72.8 dB, respectively (Fig. 7 and Fig. 8).

Fig. 9 presents the power performance of the PA. Typical scenario presents an OCP_{1dB} of 18.2 dBm and P_{SAT} of 18.9 dBm, while best and worst scenarios reach an OCP_{1dB} of 19.4 dBm and a P_{SAT} of 19.9 dBm and an OCP_{1dB} of 14 dBm

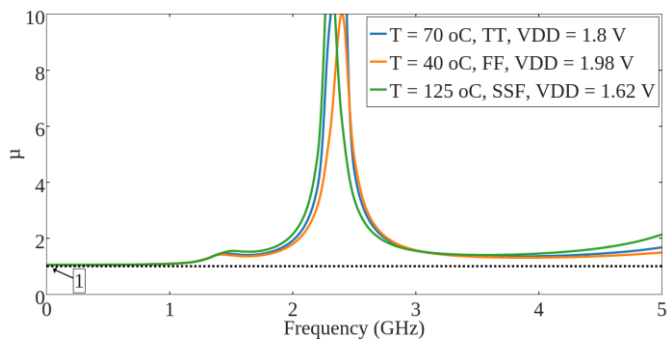

Fig. 5. μ vs. frequency for typical and extreme scenarios. The PA is unconditionally stable.

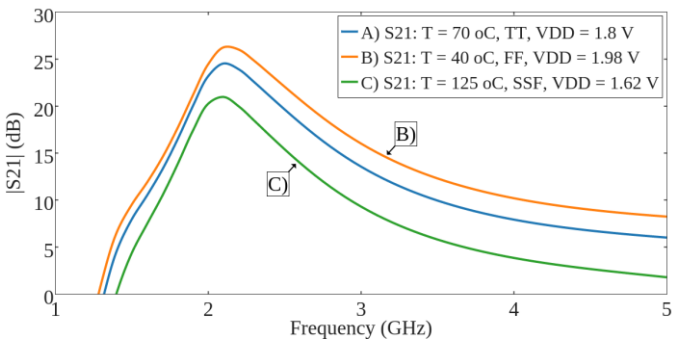

Fig. 6. S_{21} vs. frequency for typical and extreme scenarios. At 2.4 GHz, *TT* performs S_{21} of 21.1 dB, *FF* 23.5 dB S_{21} and *SSF* 16.9 dB S_{21}.

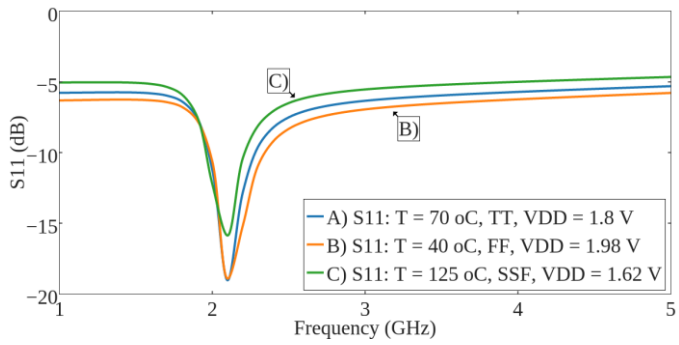

Fig. 7. S_{11} vs. frequency for typical and extreme scenarios. At 2.4 GHz, *TT* performs S_{11} of -8.2 dB, *FF* -9.2 dB S11 and SSF -7 dB.

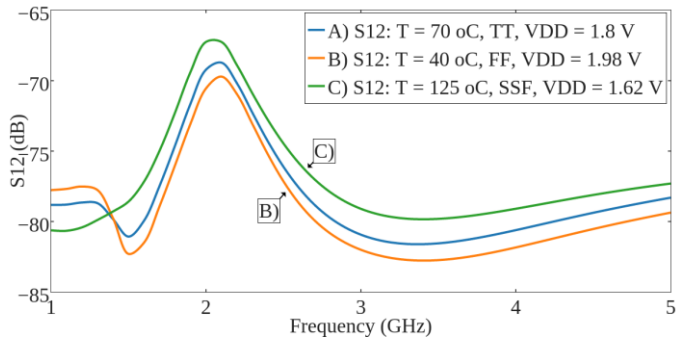

Fig. 8. S_{12} vs. frequency for typical and extreme scenarios. At 2.4 GHz, *TT* performs S_{12} of -72.8 dB. *FF* -75.2 dB and SSF -72.8 dB.

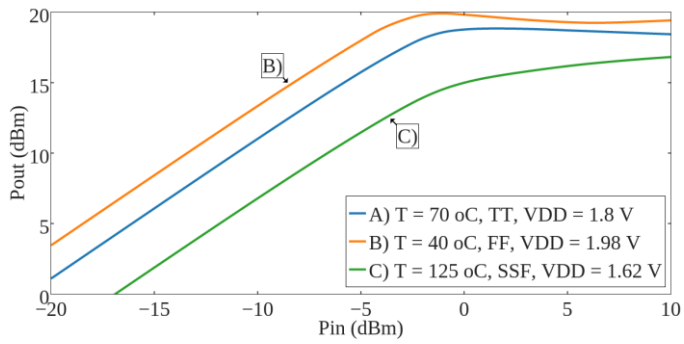

Fig. 9. P_{OUT} vs. P_{IN} for typical and extreme scenarios. Highest OCP_{1dB} reaches 19.4 dBm and lowest 14 dBm. P_{SAT} are 19.9 dBm and 16.2 dBm, respectively.

and a P_{SAT} of 16.2 dBm, respectively.

In Fig. 10, P_{DC} is presented as a function of RF output power. Considering linear operation in all three scenarios, the least power consuming combination is *SSF* corner with a supply voltage of 1.62 V at 125 ºC. This scenario consumes a peak P_{DC} of 26.3 dBm and a P_{DC} at OCP_{1dB} of 25.9 dBm. The most P_{DC} consuming scenario has a peak P_{DC} of 27.2 dBm and a P_{DC} at OCP_{1dB} of 26.6 dBm. If a 14 dBm P_{OUT} is considered, the corners *SSF*, *TT* and *FF* consumes 25.9 dBm, 26.6 dBm and 27.1 dBm, respectively.

Fig. 11 depicts PAE in terms of P_{IN}. Considering PAE at OCP_{1dB}, corner *SSF* reaches 7.1 %, *TT* performs 16.5 % and *FF* presents 17.4 %. For a -2 dBm P_{IN} value, *SSF* reaches 7.1%, *TT* 15.7 % and *FF* 20.2 %.

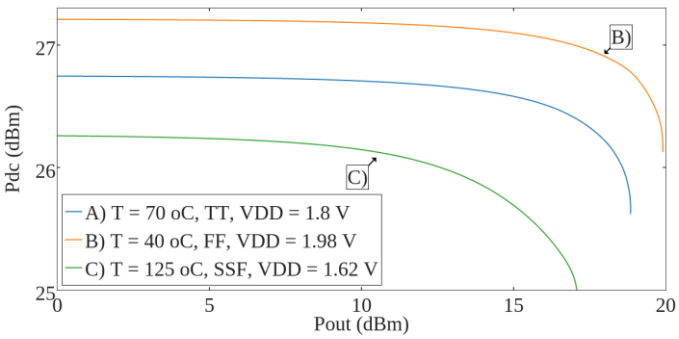

Fig. 10. P_{DC} vs. P_{OUT} for for typical and extreme scenarios. The worst scenario consumes 25.9 dBm at OCP_{1dB} while the best 26.6 dBm.

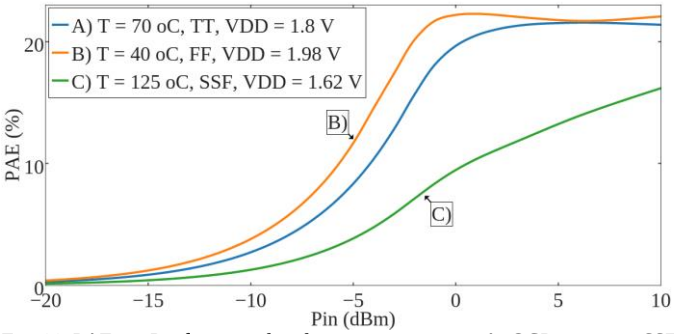

Fig. 11. PAE vs. P_{IN} for typical and extreme scenarios. At OCP_{1dB} corner *SSF* reaches 7.1 %, *TT* 15.7 % and *FF* 17.4 %.

Table I summarizes obtained post-layout results across the extreme and typical scenarios. Table II presents a comparison with other works in the literature. Compared PAs have the same approximate operating frequency and supply voltages varying from 1.2 V to 3.3 V. Among the 130 nm CMOS PA, the proposed circuit presents the second highest OCP_{1dB}, the third highest P_{SAT} and power gain. Among compared literature, this paper presents the fourth highest OCP_{1dB}, P_{SAT} and power gain. Among the literature that presents an architecture that is not differential, this paper presents the second highest OCP_{1dB} and the third highest P_{SAT} and power gain. If compared to [3], the proposed circuit has only one type of supply voltage and consumes 172 mW less P_{DC} at OCP_{1dB}. Differently from [5], the proposed architecture uses a supply voltage of 1.8 V, instead of 3.2 V. Furthermore, this paper relies only on standard components and fabrication processes to achieve the presented results. Same as [8], this work's PA is fully integrated but achieves an OCP_{1dB} and P_{SAT} 3.4 dB and 2 dB higher. Works [4, 6 and 7] present differential architecture. If compared to [4], this work performs a 3.4 dB OCP_{1dB} and a 3.1 dB P_{SAT} higher. Hong *et al.* [6] architecture has a 5.6 dB higher than this work, but consumes almost 2.6 times more P_{DC} at OCP_{1dB}. Lastly, [7] performs higher OCP_{1dB} and P_{SAT} but its architecture uses a variable gain amplifier and two independent power amplifiers to drive a load.

TABLE I. 2.4 GHZ RESULTS OF EXTREMES AND TYPICAL SCENARIOS

Scenario	Corner	Temp. (ºC)	OCP_{1dB} (dBm)	P_{SAT} (dBm)	P_{DC} @ OCP_{1dB} (mW)	Gain (dB)
Worst	SSF	125	14	16.2	385	16.9
Typical	TT	70	18.2	18.9	415	21.1
Best	FF	40	19.4	19.9	456	23.5

TABLE II. COMPARATIVE RESULTS

Ref.	Tech node (nm)	V_{DD} (V)	Gain (dB)	Area (mm^2)	P_{DC} @ OCP_{1dB} (mW)	OCP_{1dB} (dBm)	P_{SAT} (dBm)
[3]	130	2.5 /1.2	18	NA [2]	628	16.3	20.5
[4]	180	1.8	12.7	1	124	16	16.8
[5]	130	3.2	25	1.37	310	22.7	25
[6]	180	3.3	26.5	1.6	1180	25	27.7
[7]	40	3.3	37	0.55	333	24.6	25
[8] [1]	130	1.8	36	1.2	225	16	17
This work [1]	130	1.8	23.5	1.7	456	19.4	19.9

[1] Simulated result. [2] Not available.

IV. CONCLUSION

A fully integrated, two-stage, 2.4 GHz 130 nm CMOS cascode PA is presented in this paper. The PA performance was evaluated across different scenarios, in order to figure out the robustness of the circuit. Those scenarios take into account supply voltage and temperature variation in seven different corners. Based on highest OCP_{1dB}, extreme cases are compared to a typical operation scenario. The best scenario was confronted to literature. Best operation case presents an OCP_{1dB} of 19.4 dBm and a P_{SAT} of 19.9 dBm. This scenario is 1.2 dB apart from typical operations and 3.2 dB from worst case. The proposed PA, even in extreme scenarios, is unconditionally stable. The circuit was sent to fabrication and measurements are expected to the first quarter of 2016.

V. REFERENCES

[1] H. S. Ruiz and R. B. Pérez, Linear CMOS RF power amplifiers: a complete design workflow, 1st ed., New York: Springer, 2014.

[2] R. J. Baker, CMOS: circuit design, layout and simulation, 3rd ed., New Piscataway: IEEE Press, 2010.

[3] V. Knopik, B. Martineau and D. Belot, "20 dBm CMOS class AB power amplifier design for low cost 2 GHz – 2.45 GHz consummer applications in a 0.13 µm technology", IEEE International Symposium on Circuits and Systems (IASCAS), pp. 2675-2678, May 2005.

[4] J. Kang, D. Yu, K. Min and K. Bumman, "A ultra-high PAE Doherty amplifier based on 0.13 µm CMOS process", IEEE Microwave and Wireless Components Letters, vol. 16, no. 9, pp. 505-507, August 2006.

[5] K. Lin, H. Chiou, P. Wu, W. Chen, C. Ko and Y. Juand, "2.4 GHz complementary metal oxide semiconductor power amplifier using high-quality factor wafer level bondwire spiral inductor", IEEE Transactions on Components, Packaging and Manufacturing Technology, vol. 3, no. 8, pp. 1286-1292, July 2013.

[6] J. Hong, D. Imanishi, K. Okada and A. Matsuzawa, "A 2.4 GHz fully integrated CMOS power amplifier using capacitive cross-coupling", IEEE International Conference on Wireless Information Technology and Systems (ICWITS), pp. 1-4, September 2010.

[7] N. Ryu, B. Park and Y. Jeong, "Fully integrated high efficiency RF power amplifier for WLAN application in 40 nm standard CMOS process", IEEE Microwave and Wireless Components Letters, vol. 25, no. 6, pp. 382-384, June 2015.

[8] E. L. Santos, B. Leite and A. Mariano, "Multimode 2.4 GHz CMOS power amplifier with gain control for efficiency enhancement at power backoff", IEEE 6th Latin American Symposium on Circuits & Systems (LASCAS), pp. 1-4, February 2015.